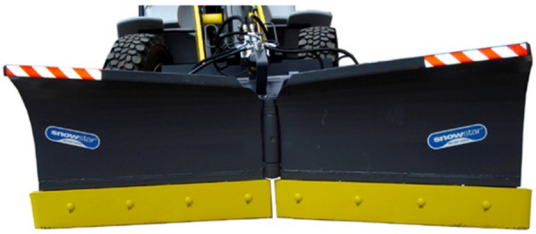

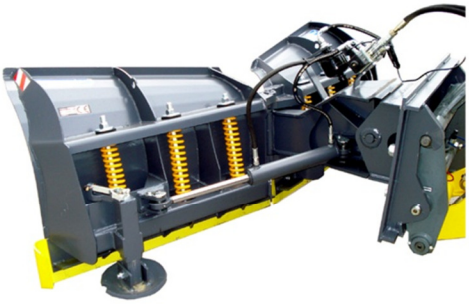

Spare parts for Snow V-Plough

Pomemet

www.pomemet.ee

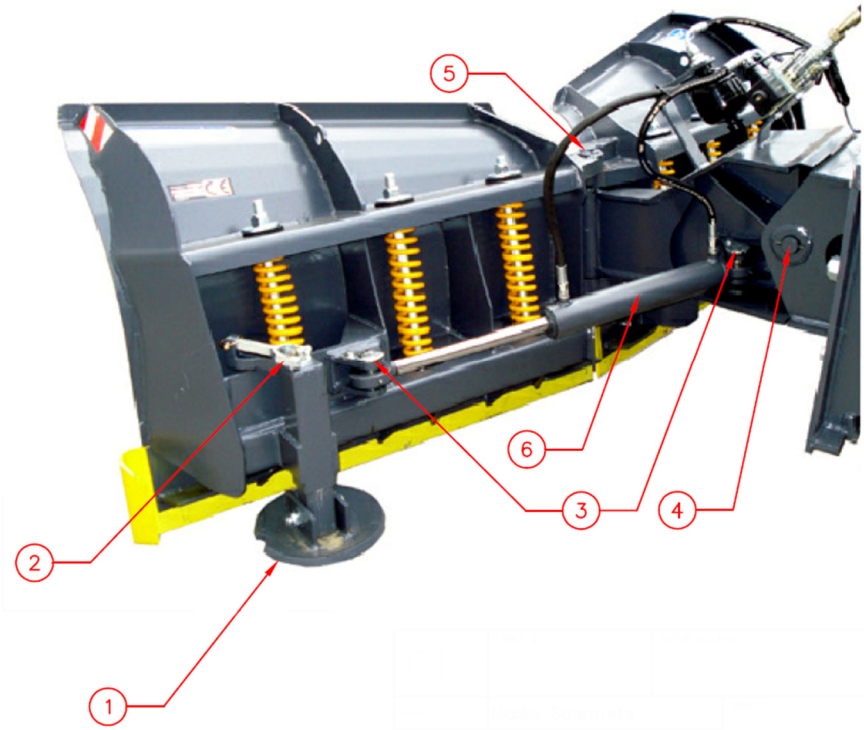

VPL 1800

Pos	Part name	Part code	Pcs
1	Plate	VPL 1800-0122	2
2	Plate Locking Fork	VPL 2500-0121	2
3	Cylinder Locking Pin	VPL 2500-0360	4
4	Horizontal Pin	VPL 1800-0359	1
5	Central Pin	VPL 1800-0358	1
6	Cylinder	HS-50-25-250-460-GE35x2	2
7	Spring	VPL 1800-0361	4
8	Rubber Pulley	VPL 2500-0357	4
9	Rubber Pulley Head	VPL 2500-0312	4
10	Long Pillar Bolt	VPL 1800-0310	4

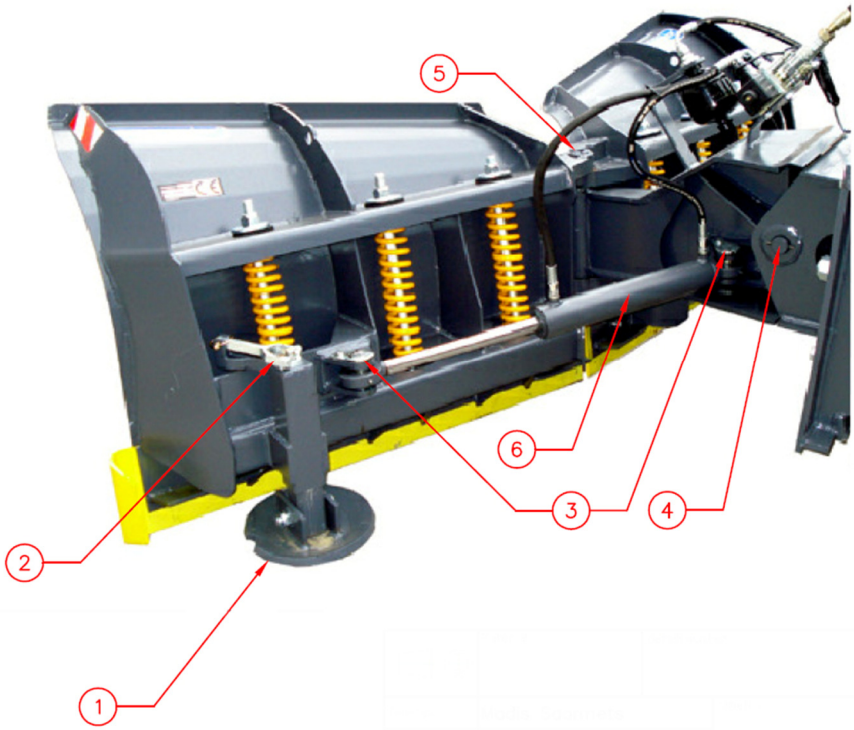

VPL 2000

Pos	Part name	Part code	Pcs
1	Plate	VPL 1800-0122	2
2	Plate Locking Fork	VPL 2500-0121	2
3	Cylinder Locking Pin	VPL 2500-0360	4
4	Horizontal Pin	VPL 1800-0359	1
5	Central Pin	VPL 1800-0358	1
6	Cylinder	HS-50-25-250-460-GE35x2	2
7	Spring	VPL 1800-0361	4
8	Rubber Pulley	VPL 2500-0357	4
9	Rubber Pulley Head	VPL 2500-0312	4
10	Long Pillar Bolt	VPL 1800-0310	4

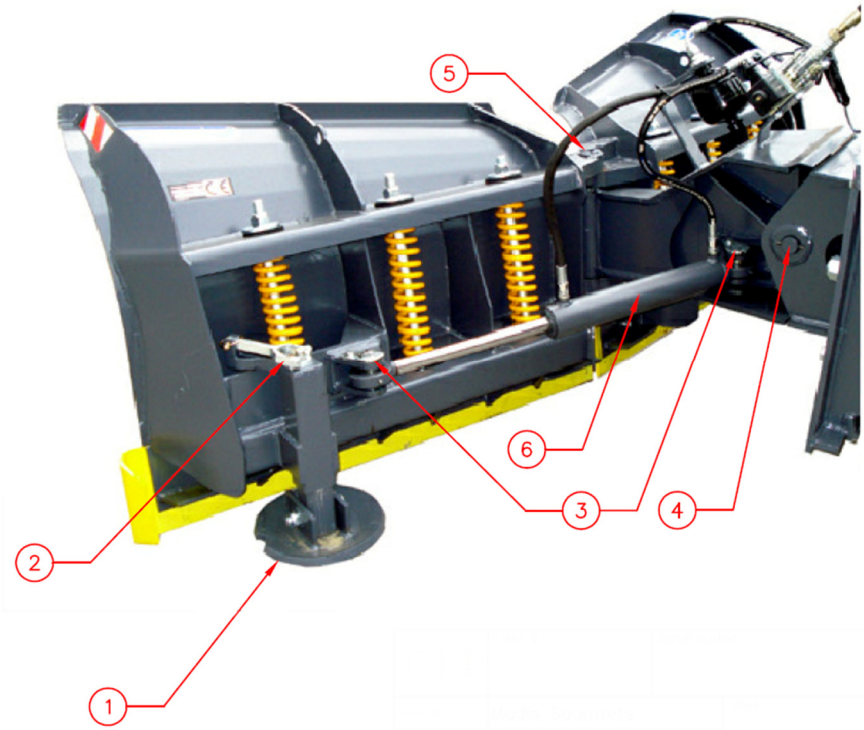

VPL 2500

Pos	Part name	Part code	Pcs
1	Plate	VPL 2500-0122	2
2	Plate Locking Fork	VPL 2500-0121	2
3	Cylinder Locking Pin	VPL 2500-0360	4
4	Horizontal Pin	VPL 2500-0359	1
5	Central Pin	VPL 2500-0358	1
6	Cylinder	HS-63-32-350-560-GE35x2	2
7	Spring	VPL 2500-0362	6
8	Rubber Pulley	VPL 2500-0357	6
9	Rubber Pulley Head	VPL 2500-0312	6
10	Long Pillar Bolt	VPL 2500-0310	6

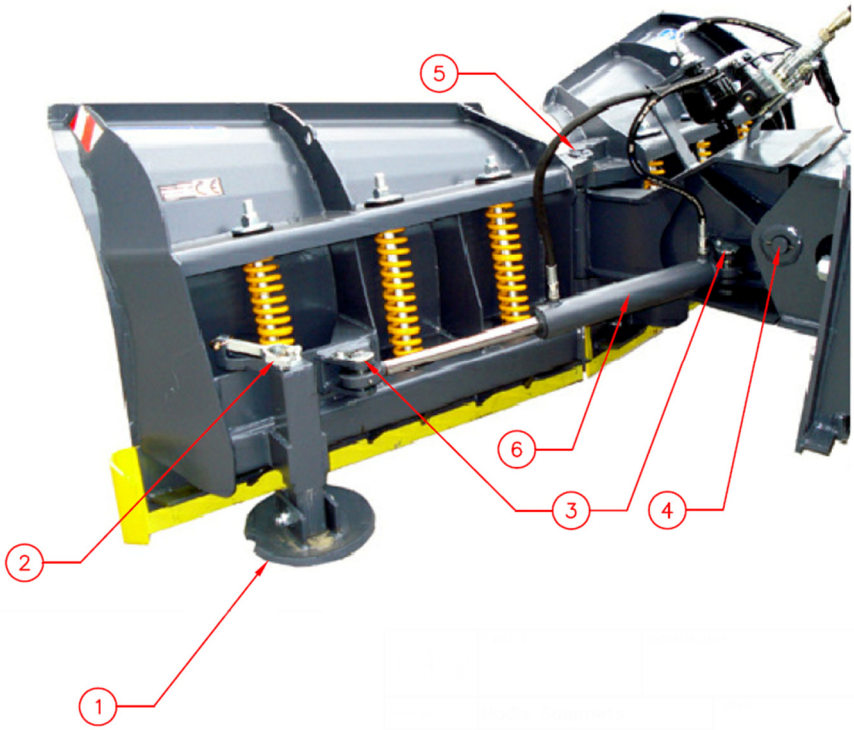

VPL 2900

Pos	Part name	Part code	Pcs
1	Plate	VPL 2500-0122	2
2	Plate Locking Fork	VPL 2500-0121	2
3	Cylinder Locking Pin	VPL 2500-0360	4
4	Horizontal Pin	VPL 2500-0359	1
5	Central Pin	VPL 2500-0358	1
6	Cylinder	HS-70-40-350-560-GE35x2	2
7	Spring	VPL 2500-0362	8
8	Rubber Pulley	VPL 2500-0357	8
9	Rubber Pulley Head	VPL 2500-0312	8
10	Long Pillar Bolt	VPL 2500-0310	8

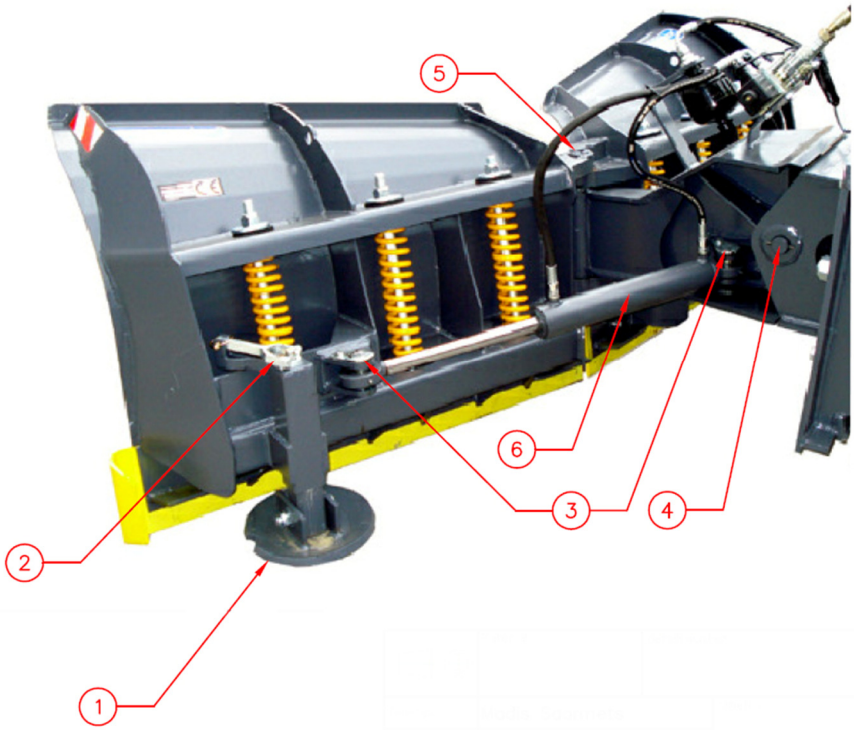

VPL 3300

Pos	Part name	Part code	Pcs
1	Plate	VPL 2500-0122	2
2	Plate Locking Fork	VPL 2500-0121	2
3	Cylinder Locking Pin	VPL 2500-0360	4
4	Horizontal Pin	VPL 2500-0359	1
5	Central Pin	VPL 2500-0358	1
6	Cylinder	HS-70-40-350-560-GE35x2	2
7	Spring	VPL 2500-0362	8
8	Rubber Pulley	VPL 2500-0357	8
9	Rubber Pulley Head	VPL 2500-0312	8
10	Long Pillar Bolt	VPL 2500-0310	8

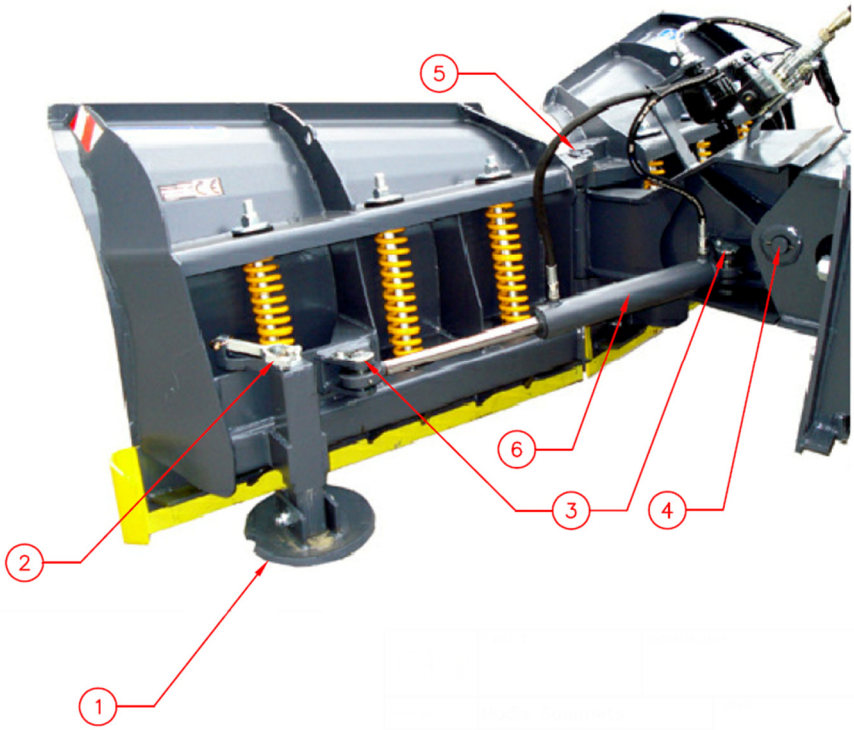

VPL 3700

Pos	Part name	Part code	Pcs
1	Plate	VPL 2500-0122	2
2	Plate Locking Fork	VPL 2500-0121	2
3	Cylinder Locking Pin	VPL 3700-0360	4
4	Horizontal Pin	VPL 2500-0359	1
5	Central Pin	VPL 2500-0358	1
6	Cylinder	HS-80-50-350-560-GE40x2	2
7	Spring	VPL 3700-0363	8
8	Rubber Pulley	VPL 2500-0357	8
9	Rubber Pulley Head	VPL 2500-0312	8
10	Long Pillar Bolt	VPL 2500-0310	8

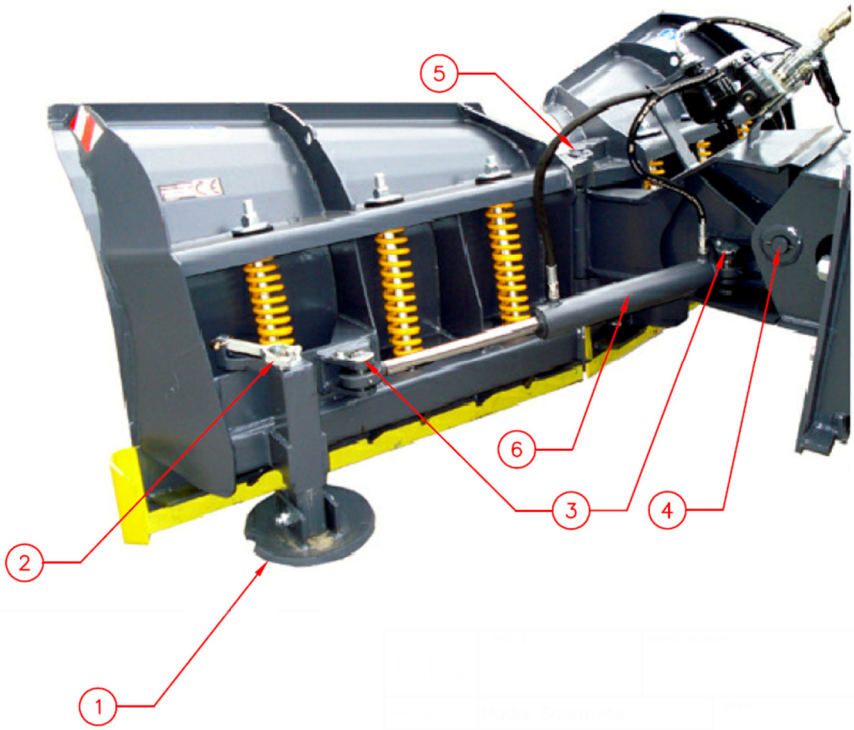

VPL 4000

Pos	Part name	Part code	Pcs
1	Plate	VPL 2500-0122	2
2	Plate Locking Fork	VPL 2500-0121	2
3	Cylinder Locking Pin	VPL 3700-0360	4
4	Horizontal Pin	VPL 2500-0359	1
5	Central Pin	VPL 2500-0358	1
6	Cylinder	HS-80-50-350-560-GE40x2	2
7	Spring	VPL 3700-0363	10
8	Rubber Pulley	VPL 2500-0357	10
9	Rubber Pulley Head	VPL 2500-0312	10
10	Long Pillar Bolt	VPL 2500-0310	10

Springs

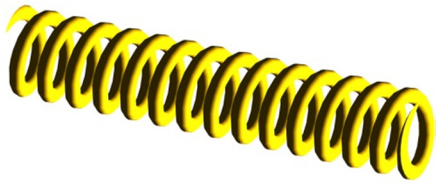

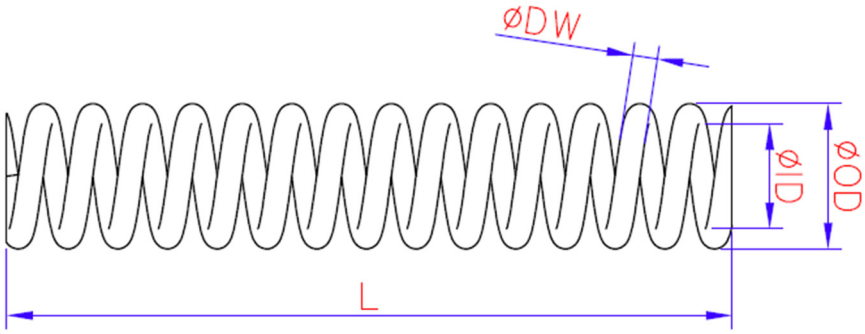

Code	L	ID	OD	DW	Fit to:
VPL 1800-0361	305	50	72	12	VPL 1800, VPL 2000
VPL 2500-0362	400	50	76	13	VPL 2500, VPL 2900, VPL 3300
VPL 3700-0363	400	50	78	14	VPL 3700, VPL 4000

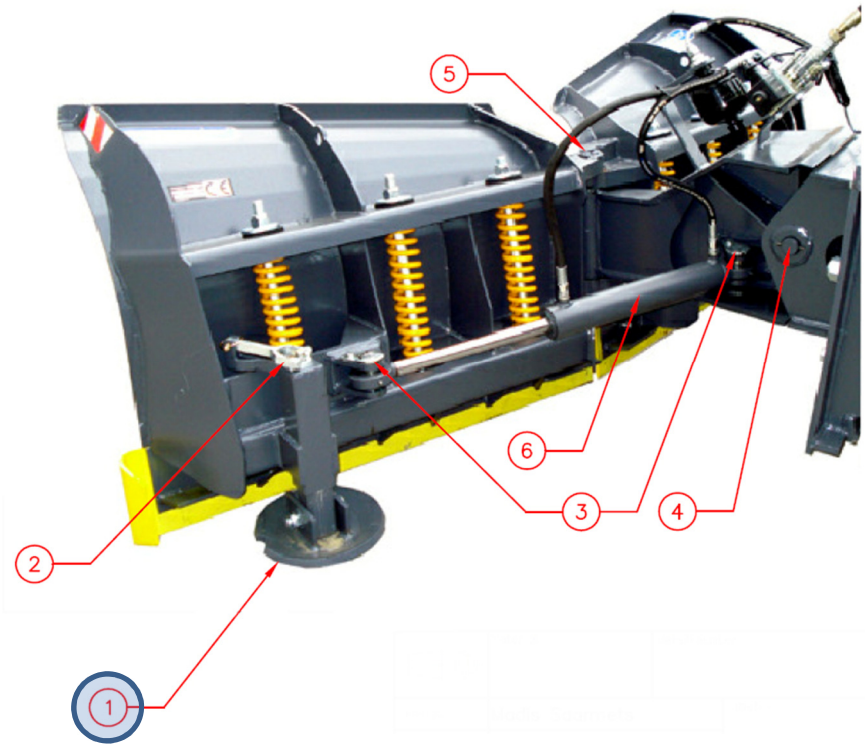

Plate

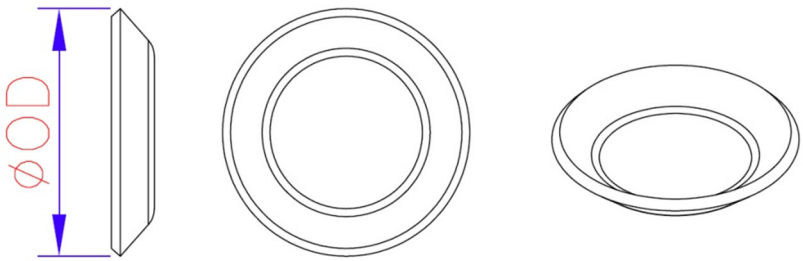

Code	OD	Fit to
VPL 1800-0122	210	VPL 1800, VPL 2000
VPL 2500-0122	290	VPL 2500, VPL 2900, VPL 3300, VPL 3700, VPL 4000

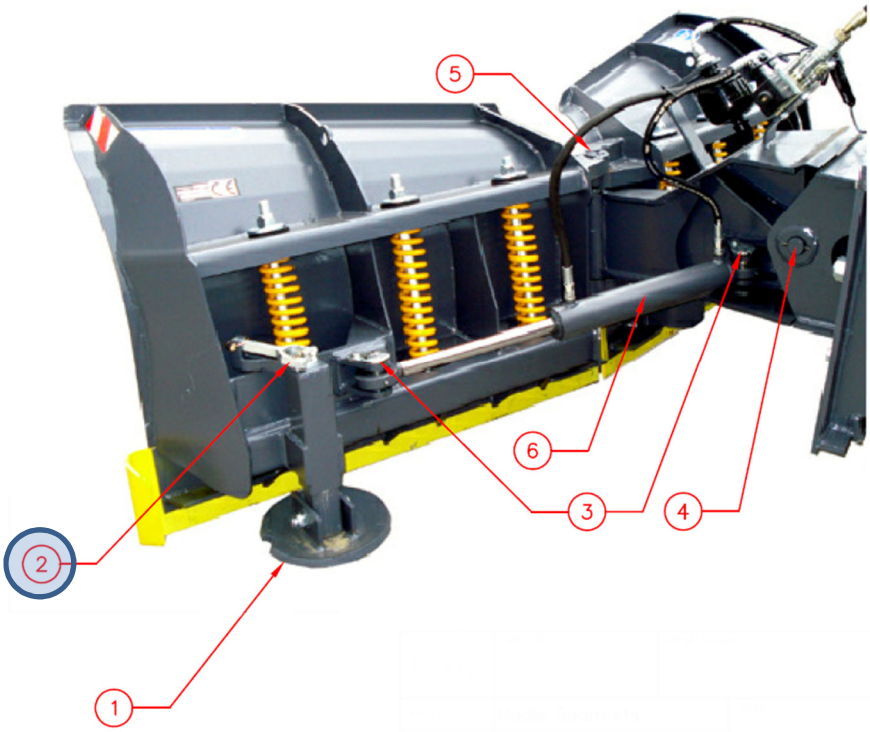

Plate Locking Fork

Code	Fit to
VPL 2500-0121	VPL 1800, VPL 2000 VPL 2500, VPL 2900, VPL 3300, VPL 3700, VPL 4000

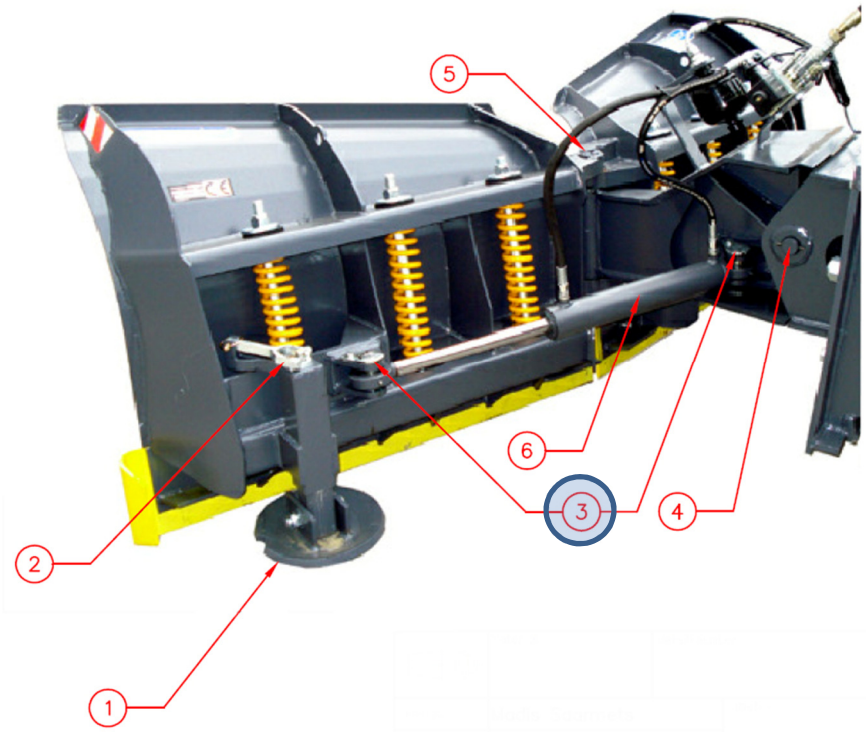

Cylinder Locking Pin

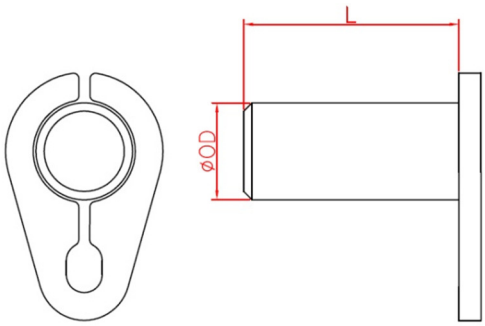

Code	L	OD	Fit to:
VPL 2500-0360	80	35	VPL 1800, VPL 2000
VPL 2500-0360	80	35	VPL 2500, VPL 2900, VPL 3300
VPL 3700-0360	80	40	VPL 3700, VPL 4000

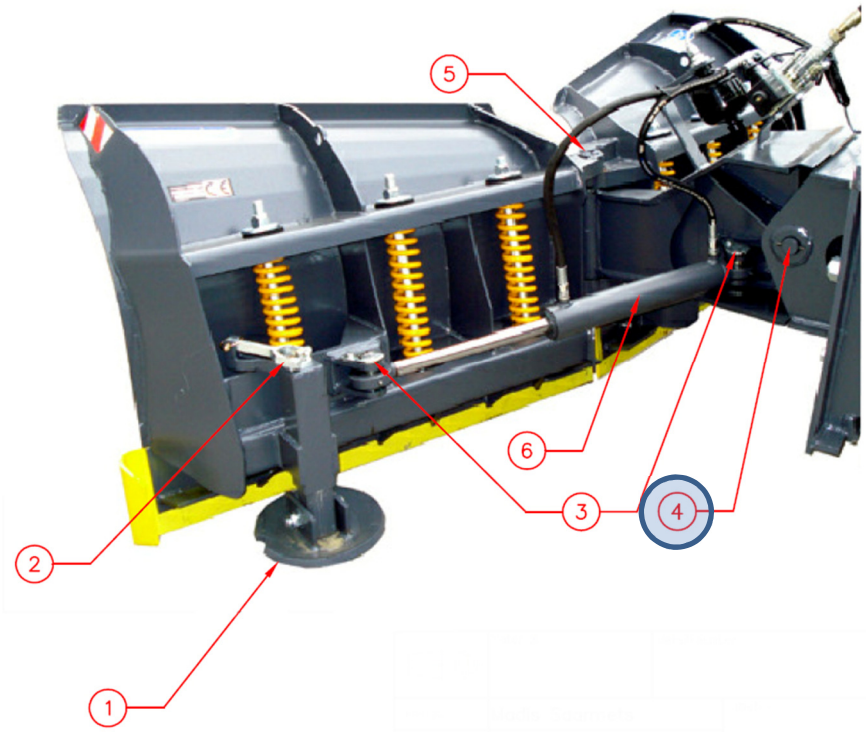

Horizontal Pin

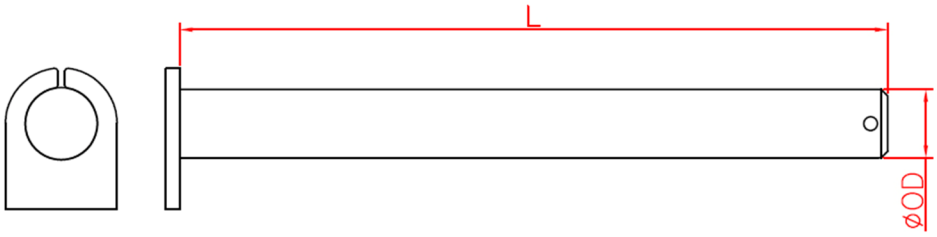

Code	L	OD	Fit to:
VPL 1800-0359	240	30	VPL 1800, VPL 2000
VPL 2500-0359	410	40	VPL 2500, 2900, 3300, 3700, 4000

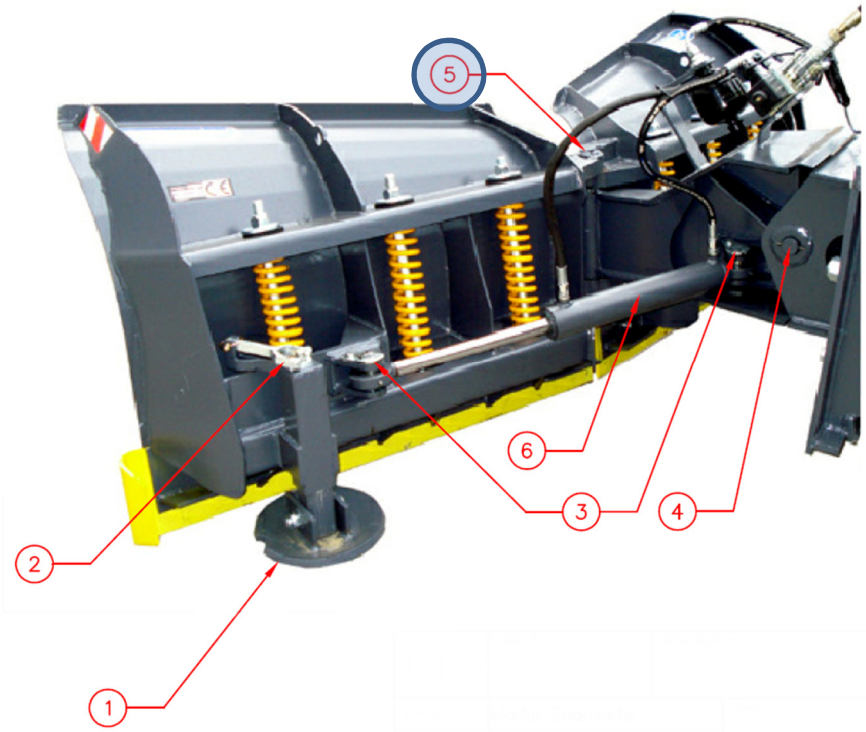

Central Pin

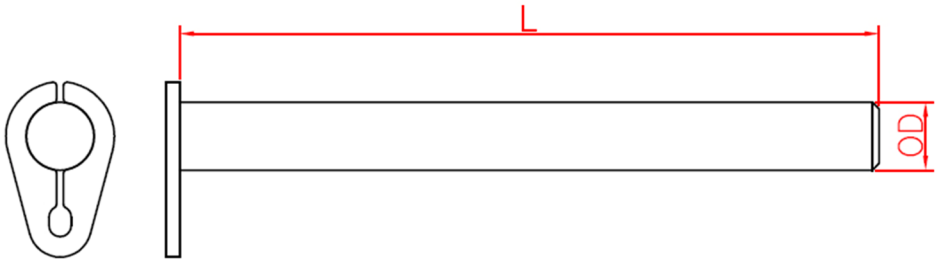

Code	L	OD	Fit to:
VPL 1800-0358	280	30	VPL 1800, VPL 2000
VPL 2500-0358	400	40	VPL 2500, 2900, 3300, 3700, 4000

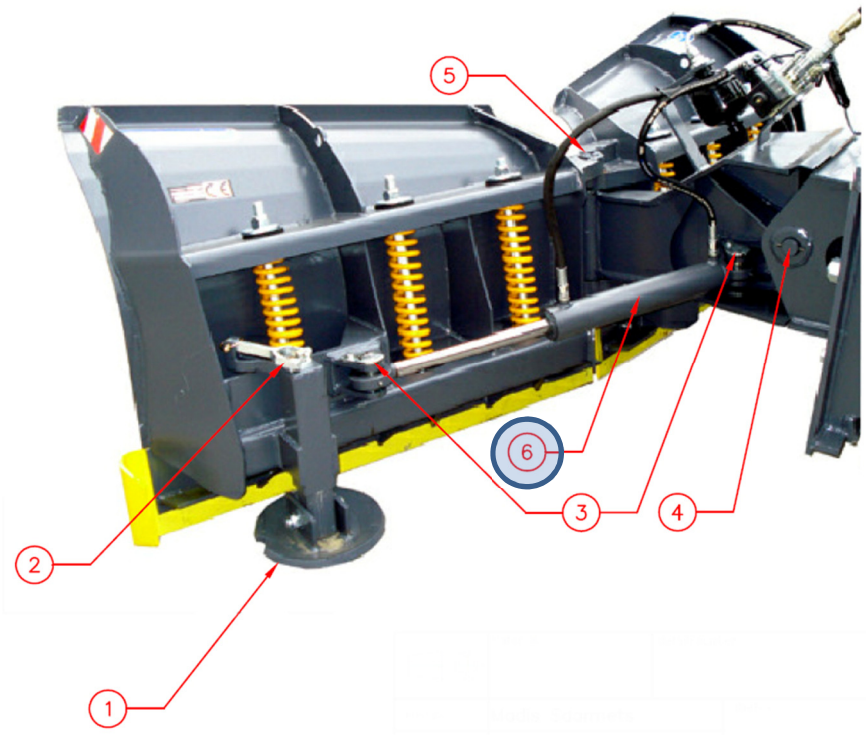

Cylinders

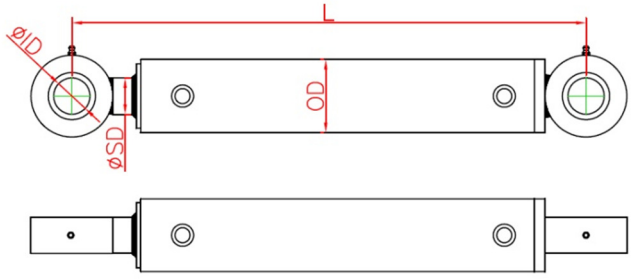

Code	L	ID	SD	OD	Fit to
HS-50-25-250-460-GE35x2	460	35	25	50	VPL 1800, VPL 2000
HS-63-32-350-560-GE35x2	560	35	32	63	VPL 2500
HS-70-40-350-560-GE35x2	560	35	40	70	VPL 2900, VPL 3300
HS-80-50-350-560-GE40x2	560	40	50	80	VPL 3700, VPL 4000

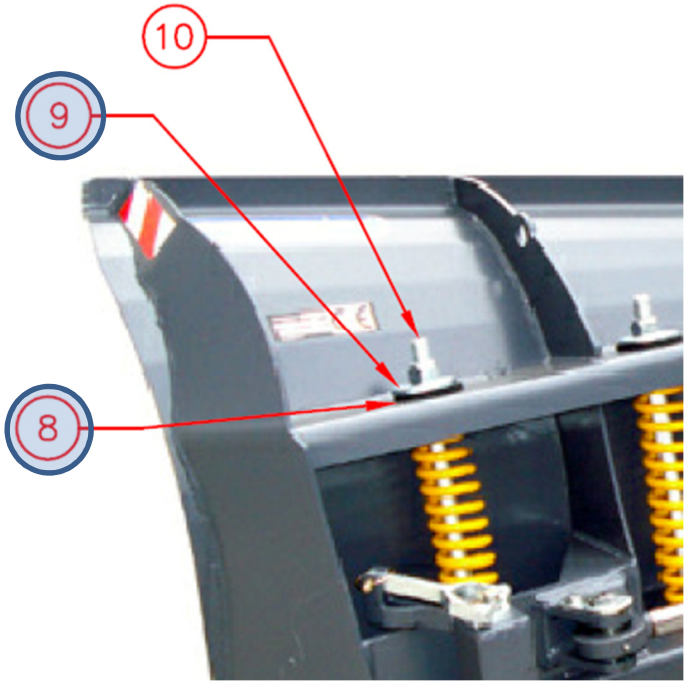

Rubber Pulley

Pos.	Code	Fit to
8	VPL 2500-0357	VPL 1800, 2000, 2500, 2900, 3300, 3700, 4000

Rubber Pulley head

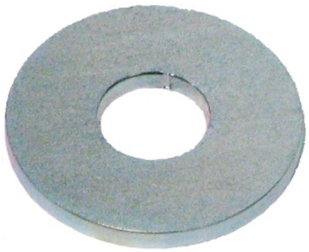

Pos.	Code	Fit to
9	VPL 2500-0312	VPL 1800, 2000, 2500, 2900, 3300, 3700, 4000

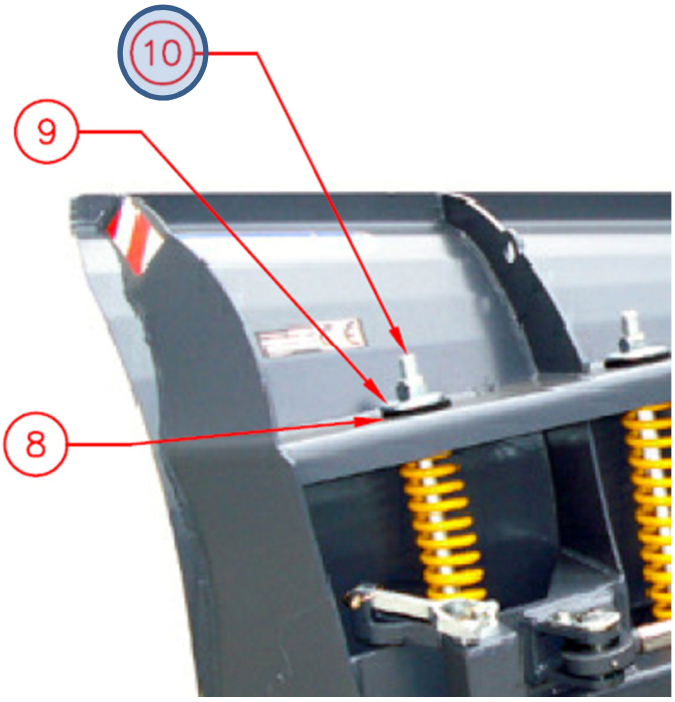

Long Pillar Bolt

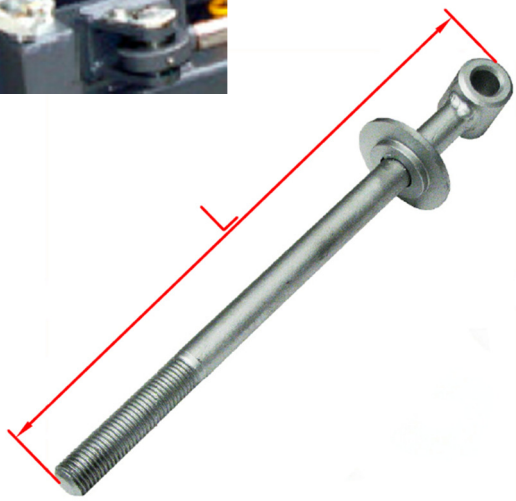

Code	L	Fit to
VPL 1800-0310	420	VPL 1800, 2000
VPL 2500-0310	530	VPL 2500, 2900, 3300, 3700, 4000

Set of Blades

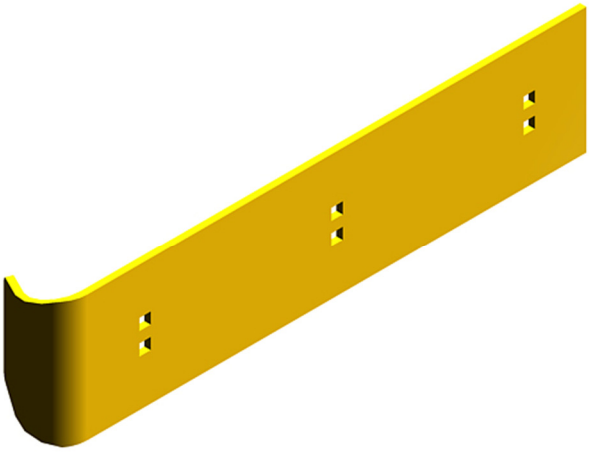

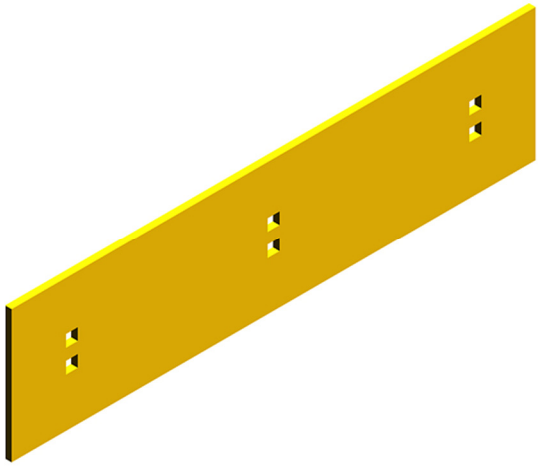

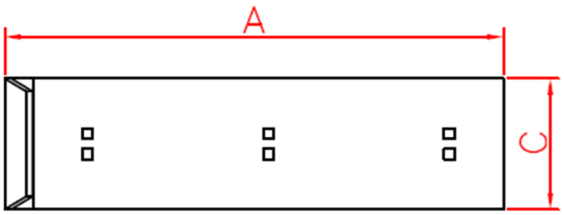

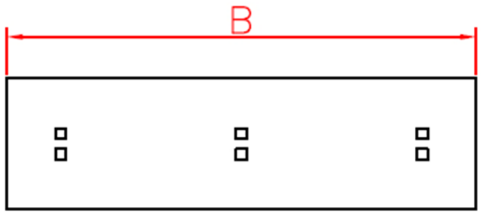

Plough	Code	A	B	C
VPL 1800	VPL 1800-0001	892,5	-	200
VPL 2000	VPL 2000-0001	965	-	200
VPL 2500	VPL 2500-0001	1280	-	200
VPL 2900	VPL 2900-0001	740	692	200
VPL 3300	VPL 3300-0001	840	792	200
VPL 3700	VPL 3700-0001	927,5	915	200
VPL 4000	VPl 4000-0001	1053	915	200